# Loan Container Incoming Inspection

## VADER® Pedicle System Navigated Instruments

# Overview Instrumentation

**42-700-3**

**42-700-1**

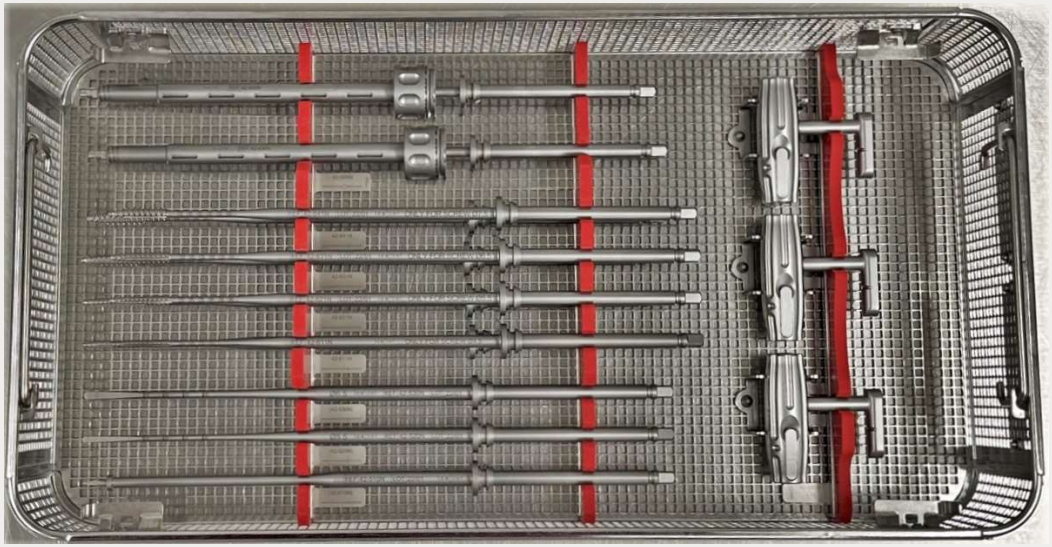

# Overview Inspection Aids

- **Screw Ø 5.5 × 45 mm (H286)**
- **K-wire, threaded Ø 1.6 (H289)**
- **K-wire, blunt tip Ø 1.1 (H293)**

# General Control

- **Do the contents of the container correspond to the kit profile?**
- **Are the instruments intact (not clearly damaged)?**
- **Is the laser marking legible/the data matrix code visible?**
  - Instruments where the laser marking is no longer legible must be replaced.
  - Instruments where the data matrix code (UDI) is no longer visible must be replaced. (When available, a scanner can be used to check the data matrix code.)

- **Movable parts/joints – maintenance using surgical instrument oil!**

  → **Functional inspections for instruments** (see following pages)

- **If an instrument is replaced, all tests involving this instrument have to be repeated.**
- **Instructions for Reprocessing: 0191US, 0240US, 0241US, 0267US**

# Functional Inspection

- **Awl (42-510N) and Pedicle Probes (42-520N, 42-530N)**
  - Check tips, no obvious damage and bending, pointed tips
  - Functional inspection of the ¼” coupling with palm handle or T-handle (42-741 or 42-731)
  - Functionality inspection of the navigated coupling with the adapter (42-680N)

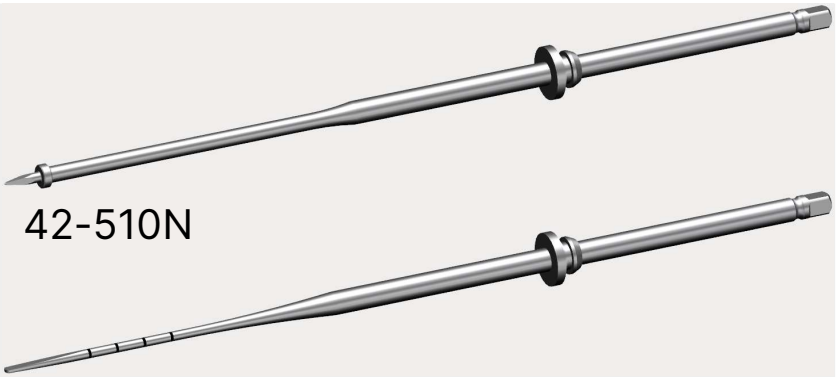

42-510N

42-520N, 42-530N

- **Navigated Taps (42-611N, 42-621N, 42-631N, 42-641N)**
  - Is the tip deformed?
  - For 42-611N: Check with K-wire, blunt tip Ø 1.1 (H293) whether cannulation is free
  - For 42-621N,42-631N, 62-641N: Check with K-wire, threaded Ø 1.6 (H289) whether cannulation is free
  - Is the thread still sharp-edged?
  - Functionality inspection of the ¼” coupling with palm handle or T-handle (42-741 or 42-731)
  - Functionality inspection of the navigated coupling with the adapter (42-680N)

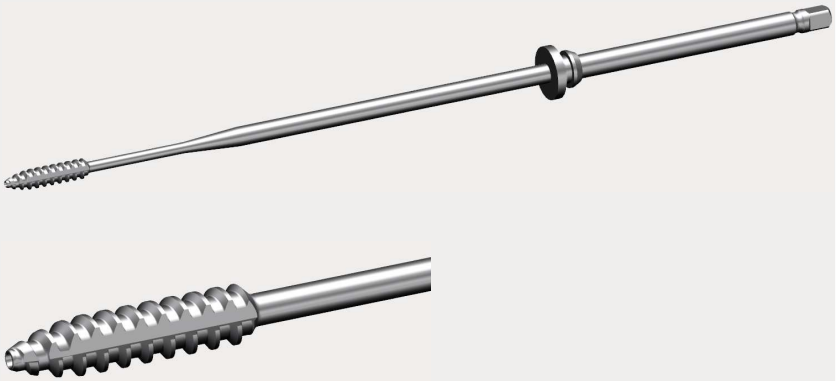

# Functional Inspection

- **Dilators (42-646, 42-647N, 42-648N, 42-649N)**
  - ALL dilators can easily be pushed over the next smaller one

42-646

42-647N

42-648N

42-649N

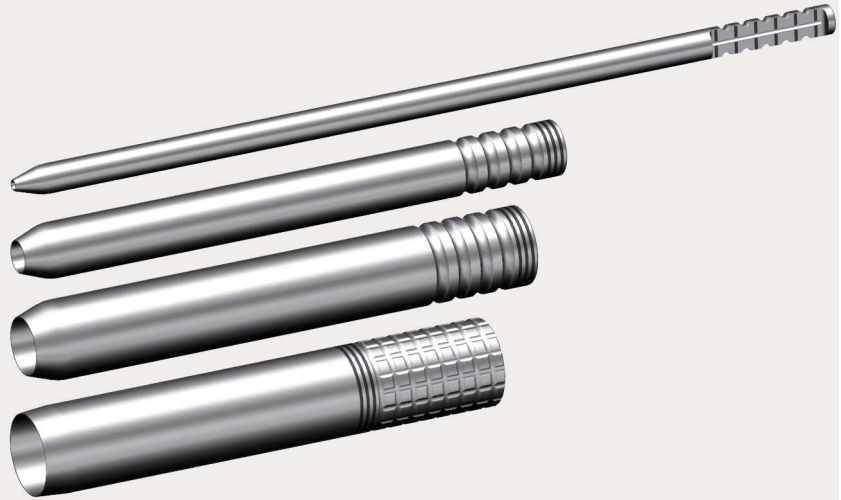

- **ALL Palm Handles, Ratchet, ¼” Coupling (42-741) and T-Handle, Ratchet, ¼” Coupling (42-731)**
  - Movable parts/joints – maintenance using surgical instrument oil!
  - Check ratchet function left and right, e.g. with navigated awl (42-510N)
  - Functional inspection of the ¼” coupling, e.g. with navigated cannulated tap (42-621N)

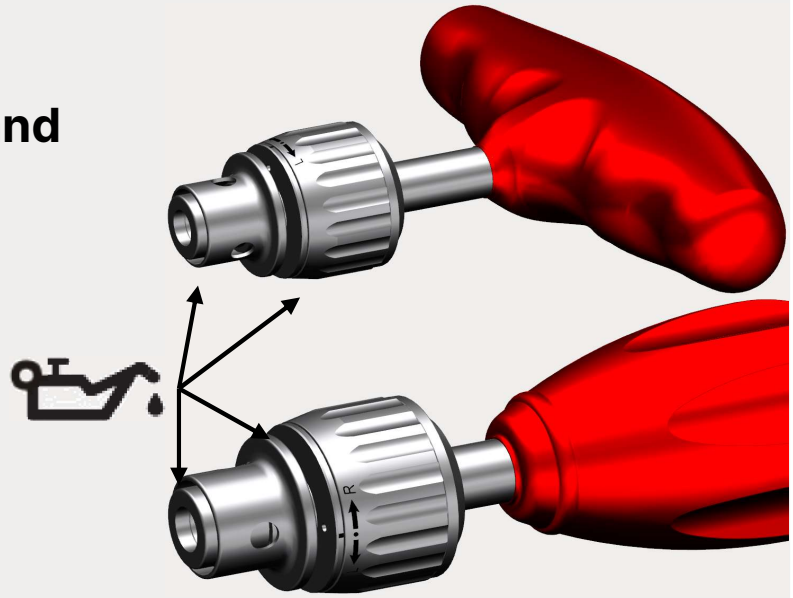

# Functional Inspection

- **ALL Navigated Cannulated Polyaxial Screwdrivers T20 (42-690N)**
  - Check with K-wire, threaded Ø 1.6 (H289) whether cannulation is free
  - Disassemble and assemble screwdriver (according to instructions for reprocessing)
  - Functional inspection of the ¼” coupling with palm handle or T-handle (42-741 or 42-731)
  - The screw Ø 5.5 × 45 mm (H286) can be mounted rigidly and straight
  - Magnetic plate holds its own weight in both positions
  - Teeth from the magnetic plate as well as from the handwheel are not worn out
  - Functionality inspection of the navigated coupling with the adapter (42-680N)

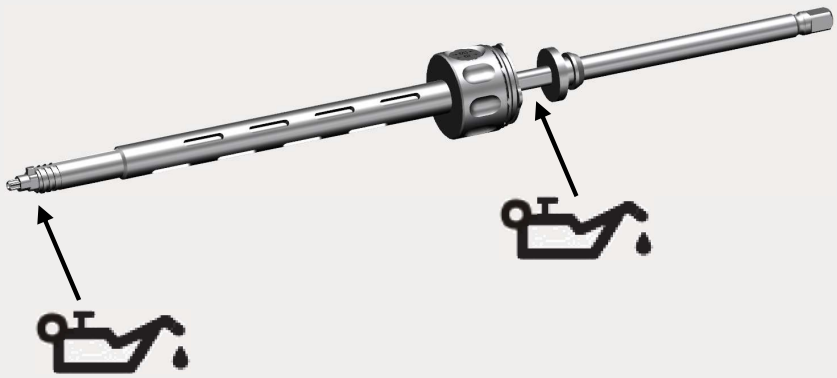

- **Navigation Adapter (42-680N)**
  - Functional inspection of the navigated coupling with the screwdriver (42-690N)

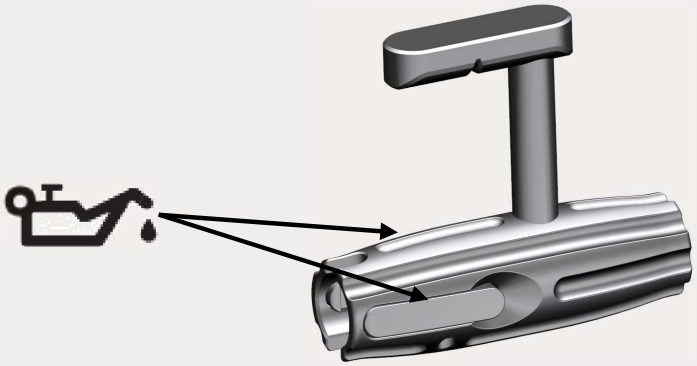

0279US.2025-06